All manuals and user guides at all-guides.com

ALPHA MICROSYSTEMS
RIGHT. FROM THE START

AM-314 Four-Port
Serial I/O Board
Installation Instructions

all-guides.com

All manuals and user guides at all-guides.com

© 1995 Alpha Microsystems

REVISIONS INCORPORATED	
REVISION	DATE
00	Jan. 1994
01	May 1994
02	Sept. 1994
03	Sept. 1994
04	Dec. 1994

AM-314 Four-Port Serial I/O Board Installation Instructions
To re-order this document, request part number PDI-00314-00.

The information contained in this manual is believed to be accurate and reliable. However, no responsibility for the accuracy, completeness or use of this information is assumed by Alpha Microsystems.

This document may contain references to products covered under U.S. Patent Number 4,530,048.

The following are registered trademarks of Alpha Microsystems, Santa Ana, CA 92799:

AMIGOS	AMOS	Alpha Micro	AlphaACCOUNTING
AlphaBASIC	AlphaCALC	AlphaCOBOL	AlphaFORTRAN 77
AlphaLAN	AlphaLEDGER	AlphaMAIL	AlphaMATE
AlphaNET	AlphaPASCAL	AlphaRJE	AlphaWRITE
CASELODE	OmniBASIC	VER-A-TEL	VIDEOTRAX

The following are trademarks of Alpha Microsystems, Santa Ana, CA 92799:

AlphaBASIC PLUS	AlphaVUE	AM-PC	AMTEC
DART	ESP	MULTI	inSight/am
inFront/am			

All other copyrights and trademarks are the property of their respective holders.

ALPHA MICROSYSTEMS
2722 S. Fairview Street
P.O. Box 25059
Santa Ana, CA 92799

All manuals and user guides at all-guides.com

TABLE OF CONTENTS

1.0 INTRODUCTION 1

2.0 PRODUCT DESCRIPTION 1

3.0 CONFIGURING YOUR AM-314 BOARDS 1

4.0 INSTALLATION OVERVIEW 2

5.0 AM-314 INSTALLATION (ALL AM-1600 COMPUTERS) 2
- 5.1 Installing the I/O Cables 4
- 5.2 Modifying the System Initialization Command File 6
- 5.3 Finishing the Installation 10

6.0 AM-314 INSTALLATION (EAGLE SERIES COMPUTERS) 11
- 6.1 Eagle 300 AM-319(-00) I/O Expansion Slots 14
- 6.2 Eagle 200 AM-319(-10) I/O Expansion Slots 15
- 6.3 Eagle 100 AM-137 I/O Expansion Slot 16
- 6.4 Installing the AM-314 Board 17
- 6.5 Eagle 300 Rear Panel I/O Configuration 17
- 6.6 Eagle 200 Rear Panel I/O Configuration 19
- 6.7 Eagle 100 Rear Panel I/O Configuration 21
- 6.8 Installing AM-314 DB9 Connectors on the Rear Panel 23
- 6.9 System Initialization Command File (Eagle 300 and 200) 24
- 6.10 System Initialization Command File (Eagle 100) 27
- 6.11 Finishing the Installation 30

7.0 DB-9 CONNECTOR SIGNALS FOR RS-232 AND RS-422 30

8.0 TERMINAL CABLES 31
- 8.1 AM-65 Terminal and RS-422 Cabling 32
- 8.2 Workstation 32

9.0 PRINTER CABLES 34

All manuals and user guides at all-guides.com

1.0 INTRODUCTION

The instructions in this document describe the installation of AM-314 four-port serial I/O boards into AM-1600 (both desktop and deskside models), as well as Eagle 100, 200, and 300 computers. The information is written for the experienced Alpha Micro Service Technician, so if you do not feel comfortable performing the hardware and software procedures discussed below, please contact your Alpha Micro Dealer or the Alpha Micro Technical Support Group for help.

2.0 PRODUCT DESCRIPTION

The AM-314 board supports four asynchronous serial I/O ports. AM-314 serial ports can be individually configured for either RS232 or RS422 protocols. Each AM-314 board is linked to the rear panel of your computer using a 40-pin cable with four female DB9 connectors at one end and a standard 40-pin connector at the other. The AM-1600's AM-135 board has four slots designed for serial I/O expansion. Eagle 300 computers have also have four I/O expansion slots; Eagle 200 computers have two I/O expansion slots; and Eagle 100 computers have one I/O expansion slot.

Eagle computers also support the AM-318 eight-port serial I/O board. Special instructions on mixing AM-314 and AM-318 boards in Eagle computers can be found in the *AM-318 Eight-Port Serial I/O Board Installation Instructions.*

3.0 CONFIGURING YOUR AM-314 BOARDS

There are no address jumpers on the AM-314 board. In fact, the only jumpers on the board are the RS422/232 jumpers. The jumpers at location W0 control the RS422/232 selection for the first port; the W1 jumpers control the second port; the W2 jumpers control the third port; the W3 jumpers control the fourth port. All boards are shipped configured for RS232 as shown in the illustration below:

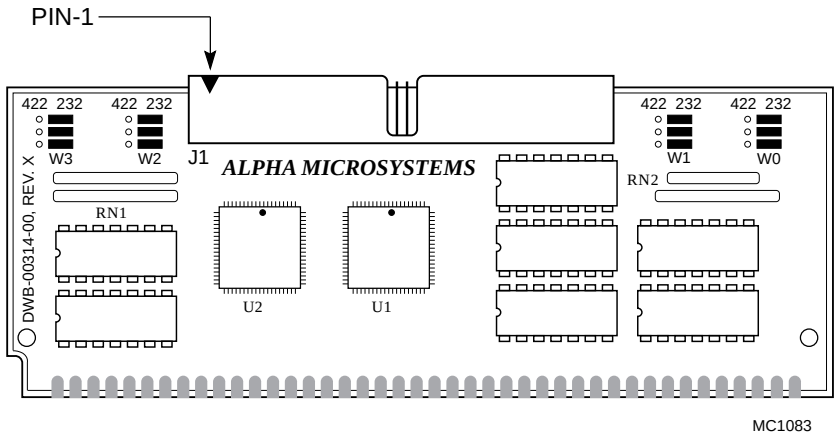

AM-314 Four-Port Serial I/O Board

All manuals and user guides at all-guides.com

4.0 INSTALLATION OVERVIEW

The installation instructions are identical for AM-1600 desktop and deskside computers; however, there are some significant differences in the procedure for installing an AM-314 board into an Eagle computer. Because of the differences, the AM-1600 (desktop and deskside) AM-314 installation instructions and the Eagle AM-314 installation instructions will be split into two sections. Section 5.X will include the AM-314 installation information for AM-1600 computers and Section 6.X will include the AM-314 installation information for Eagle computers.

5.0 AM-314 INSTALLATION (ALL AM-1600 COMPUTERS)

The first step in the installation process is to remove the computer's top cover. Instructions for removing the top cover from the AM-1600 desktop model are located in the *AM-1600 Computer Owner's Manual*. For the deskside AM-1600, instructions for removing your computer's top cover are located in the *AM-1600 Deskside Computer Service Manual.*

With the AC power cord unplugged and the top cover removed, the components inside your computer are vulnerable to damage caused by static discharge. Your body and clothing are capable of storing an electrical charge that can damage or destroy unprotected electronic components. Prior to handling any computer hardware, make sure your work area is properly protected against static discharge. There are a number of commercially available static protection devices designed specifically to protect your equipment from harmful static discharge.

Once the top cover is removed, you will be able to access your computer's main circuit board, which is called the AM-135. The AM-135 board has four expansion slots designed for AM-314 I/O boards.

The AM-135 board illustration, located on the following page, shows the four serial I/O expansion slots: J17, J16, J15, and J14. As indicated in the illustration, the first I/O board installs in J17, the second in J16, the third in J15, and the fourth in J14.

All manuals and user guides at all-guides.com

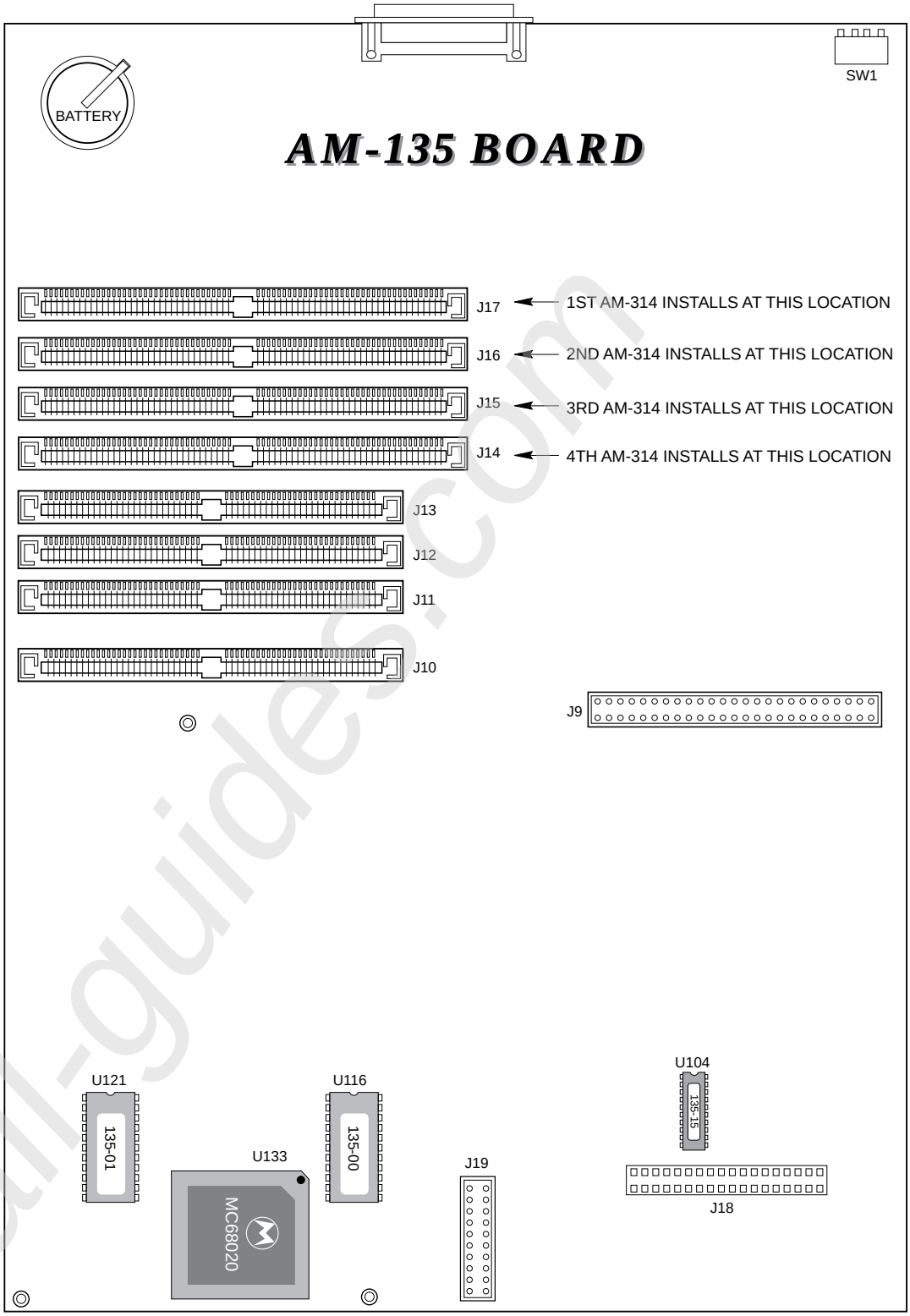

AM-135 Board I/O Expansion Slots

All manuals and user guides at all-guides.com

The AM-135's I/O expansion slots are very similiar to the type of slots memory SIMM modules plug into. The AM-314 board should be inserted into the appropriate slot with the component side of the AM-314 board facing your computer's rear panel. The AM-314 must be inserted into the expansion slot at a slight angle and after you feel the board settle into the slot, you rotate it into an upright position. When the AM-314 is properly positioned, the metal retainer clips at each end of the expansion slot will click into position, locking the board in place.

5.1 Installing the I/O Cables

The cable that links your AM-314 board to the rear panel of your computer has four female DB9 connectors at one end and a standard 40-pin connector at the other. Plug one 40-pin I/O cable into each of the AM-314 boards. The 40-pin connector on the AM-314 board has an embossed arrow showing the pin-1 location. Make sure the red stripe on the I/O cable aligns with the embossed arrow on the connector.

The rear panel of your computer has 16 DB9 cutouts labeled 0 through 15. The illustration on the following page shows the DB9 connector orientation for both desktop and deskside AM-1600 computers:

All manuals and user guides at all-guides.com

AM-1600 DESKSIDE SERIAL I/O CONFIGURATION

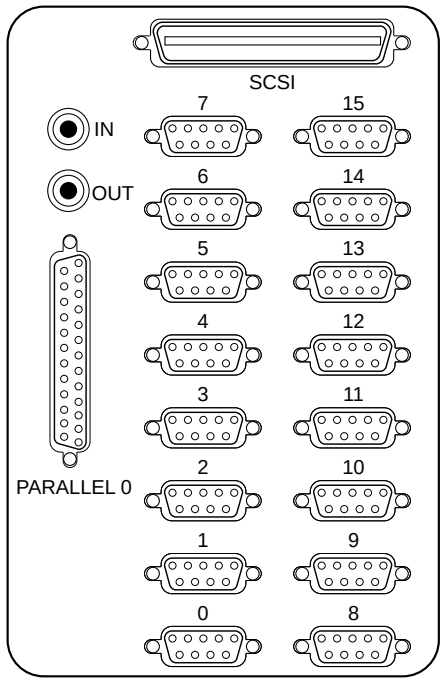

AM-1600 DESKTOP SERIAL I/O CONFIGURATION

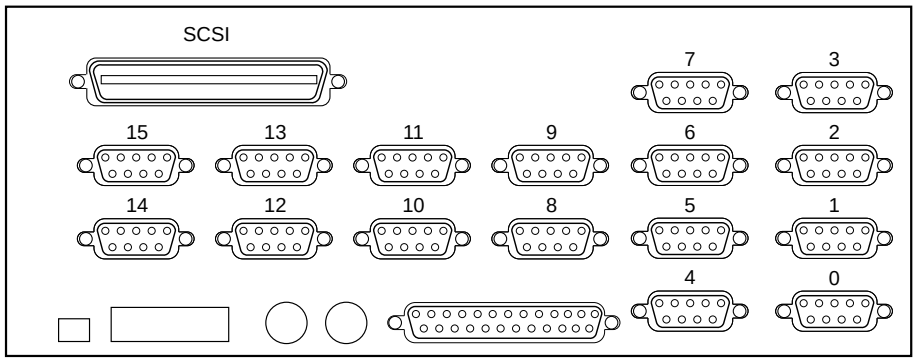

AM-1600 Rear Panel Serial I/O Configuration

The AM-314 board plugged into connector J17 attaches to the rear panel at locations 0, 1, 2, and 3. The AM-314 board plugged into connector J16 attaches to the rear panel at locations 4, 5, 6, and 7. The AM-314 board plugged into connector J15 attaches to the rear panel at locations 8, 9, 10, and 11. The AM-314 board plugged into connector J14 attaches to the rear panel at locations 12, 13, 14, and 15.

All manuals and user guides at all-guides.com

One end of the AM-314 40-pin I/O cable splits of into four separate cables, each with its own DB9 connector. Notice how the cable leading to each of the DB9 connectors is marked:

(**P0, 4, 8, 12)**

(P1, 5, 9, 13)

(P2, 6, 10, 14)

(P3, 7, 11, 15)

The first number following the letter "P" applies to the AM-314 board installed in connector J17; the second number following the P applies to the AM-314 board installed in connector J16; the third number following the P applies to the AM-314 board installed in connector J15; the last number following the P applies to the AM-314 board installed in connector J14.

Attach the DB9 connectors to the rear panel of your computer, using the 3/16" hex-nuts included in the mounting kit.

Re-install the AM-1600M top cover.

5.2 Modifying the System Initialization Command File

In order to use a serial port, it needs to be defined in your system initialization command file. This file, which is located in the SYS: account, is called AMOSL.INI. Within this file, serial ports are defined using an octal (base 8) numbering system. The octal number used corresponds directly to what slot on the AM-135 a particular I/O board is plugged into. The following table shows the AM-314 octal port numbers for each of the four I/O expansion slots on the AM-135 board:

AM-135 I/O EXPANSION SLOT	OCTAL PORT NUMBERING FOR AM-314 BOARDS
J17	0 -3
J16	4 - 7
J15	10 - 13
J14	14 - 17

MC1086

AM-135 / AM-314 Octal Port Numbering Scheme

All manuals and user guides at all-guides.com

To illustrate how AM-314 serial ports are defined in the AMOSL.INI file, we'll construct a sample system initialization command file based on the installation of four AM-314 boards.

It's never a good idea to directly modify your AMOSL.INI file; always create a test file; type:

```
LOG SYS: RETURN
COPY TEST.INI=AMOSL.INI RETURN
```

Several areas in the TEST.INI file need to be modified:

1. You need to make sure the total number of jobs assigned to the JOBS statement is increased by the number of new serial ports being added to the computer. The example configuration has four AM-314 boards, which is a total of 16 serial ports. For our example configuration, we will set the JOBS statement to 22, which will allow for all the serial ports, the AM-1600's one on-board parallel port, and a couple of extras to support spawned jobs.

2. You must also add some additional JOBALC statements. JOBALC allocates a name to each defined job. In our TEST.INI file, we'll use names like JOB1, JOB2, etc. However, you could just as easily use TOM, DICK, HARRY, etc.

3. Roadrunner enhanced AM-1600 computers require a healthy quantity of queue blocks. When you add new serial ports, you need to increase your queue block allocation. Use the following queue block formula to determine how many queue blocks you require.

   ```
   NEW QUEUE BLOCK REQUIREMENT = OLD QUEUE BLOCKS + (13 x THE NUMBER OF JOBS)
   ```

   For example, if the QUEUE statement in your system initialization command file is currently set to 200 and the JOBS statement is set to 22, the resulting formula would look like this:

   ```
   NEW QUEUE BLOCK REQUIREMENT = 200 + (13 x 22)
   ```

   For our example, the QUEUE statement should be changed to 486 to accommodate our new queue block requirements.

4. You will also need to add a TRMDEF statement to your TEST.INI file for each new port. The TRMDEF statement is where the octal port number is assigned. The basic elements that make up a TRMDEF statement are shown below:

All manuals and user guides at all-guides.com

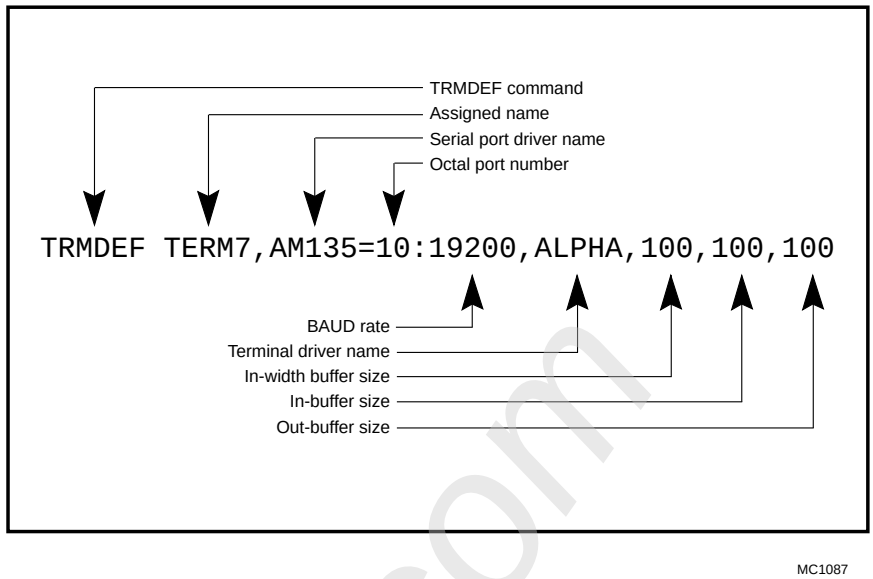

TRMDEF Command Statement

5. Finally, you will add SETJOB statements that attach the JOBALC name to the TRMDEF name, assign memory to the job, and log the job on.

An Example of our TEST.INI file with all the support statements for the four AM-314 boards is shown on the next page.

All manuals and user guides at all-guides.com


```
:T
JOBS 22
JOBALC JOB1,JOB2,JOB3,JOB4,JOB5,JOB6,JOB7,JOB8,JOB9,JOB10
JOBALC JOB11,JOB12,JOB13,JOB14,JOB15,JOB16
;
QUEUE 486
;
TRMDEF TERM1,AM135=0:19200,ALPHA,100,100,100
TRMDEF TERM2,AM135=1:19200,ALPHA,100,100,100
TRMDEF TERM3,AM135=2:19200,ALPHA,100,100,100
TRMDEF TERM4,AM135=3:19200,ALPHA,100,100,100
TRMDEF TERM5,AM135=4:19200,ALPHA,100,100,100
TRMDEF TERM6,AM135=5:19200,ALPHA,100,100,100
TRMDEF TERM7,AM135=6:19200,ALPHA,100,100,100
TRMDEF TERM8,AM135=7:19200,ALPHA,100,100,100
TRMDEF TERM9,AM135=10:19200,ALPHA,100,100,100
TRMDEF TERM10,AM135=11:19200,ALPHA,100,100,100
TRMDEF TERM11,AM135=12:19200,ALPHA,100,100,100
TRMDEF TERM12,AM135=13:19200,ALPHA,100,100,100
TRMDEF TERM13,AM135=14:19200,ALPHA,100,100,100
TRMDEF TERM14,AM135=15:19200,ALPHA,100,100,100
TRMDEF TERM15,AM135=16:19200,ALPHA,100,100,100
TRMDEF TERM16,AM135=17:19200,ALPHA,100,100,100
;
DEVTBL DSK1,DSK2
DEVTBL TRM,RES,MEM
DEVTBL /VLP0
;
BITMAP DSK
SYSTEM TRM.DVR
SYSTEM VLP.DVR[1,6]
SYSTEM
;
SETJOB JOB2,TERM2,500K,LOGIN
SETJOB JOB3,TERM3,500K,LOGIN
SETJOB JOB4,TERM4,500K,LOGIN
SETJOB JOB5,TERM5,500K,LOGIN
SETJOB JOB6,TERM6,500K,LOGIN
SETJOB JOB7,TERM7,500K,LOGIN
SETJOB JOB8,TERM8,500K,LOGIN
SETJOB JOB9,TERM9,500K,LOGIN
SETJOB JOB10,TERM10,500K,LOGIN
SETJOB JOB11,TERM11,500K,LOGIN
SETJOB JOB12,TERM12,500K,LOGIN
SETJOB JOB13,TERM13,500K,LOGIN
SETJOB JOB14,TERM14,500K,LOGIN
SETJOB JOB15,TERM15,500K,LOGIN
SETJOB JOB16,TERM16,500K,LOGIN
;
MOUNT DSK1:
MOUNT DSK2:
;
MEMORY 0
```

Update JOBS and JOBALC statements

QUEUE block allocation increased

TRMDEF statements for 1st AM-314

TRMDEF statements for 2nd AM-314

TRMDEF statements for 3rd AM-314

TRMDEF statements for 4th AM-314

SETJOB statements for all serial ports

Sample TEST.INI File

When installing an AM-314 serial I/O board into an AM-135 board, make sure you use **AM135** as the serial port driver in your TRMDEF statements.

All manuals and user guides at all-guides.com

5.3 Finishing the Installation

Once you have created a TEST.INI file that is applicable to your configuration, you need to verify it has been correctly modified. You do this by using the MONTST command:

```
LOG OPR: RETURN
MONTST AMOSL,TEST.INI RETURN
```

Watch closely as the system initialization command file is executed; make sure no errors are displayed on your terminal screen. If an error does occur, take another look at your TEST.INI file; double check your octal port numbers and other statements you added to support the serial ports.

After you are certain your TEST.INI file is working correctly, execute the following command:

```
COPY AMOSL.INI=TEST.INI RETURN
```

All manuals and user guides at all-guides.com

6.0∞AM-314 INSTALLATION (EAGLE SERIES COMPUTERS)

The first step in the installation process is to remove your computer's top cover. Instructions for removing the top cover are located in the *Eagle Computer Service Manual*.

With the AC power cord unplugged and the top cover removed, the components inside your computer are vulnerable to damage caused by static discharge. Your body and clothing are capable of storing an electrical charge that can damage or destroy unprotected electronic components. Prior to handling any computer hardware, make sure your work area is properly protected against static discharge. There are a number of commercially available static protection devices designed specifically to protect your equipment from harmful static discharge.

After your computer's top cover has been removed, you need to gain access to the main electronics board. If you have an Eagle 200 or 300 computer, access to your main electronics board may be blocked if your Roadrunner board is mounted vertically, as shown in the next two illustrations. If this true for your application, you will need to remove the Roadrunner board and its mounting bracket in order to install your I/O board or boards. Instructions for doing this are shown in the illustrations.

Many Eagle 200 and 300 computers have their Roadrunner boards mounted on the bottom of the chassis in the horizontal position, which does not block access to the main electronics board. Also, Eagle 100 computers do not use a separate Roadrunner board and access to the main electronics board is not a problem.

All manuals and user guides at all-guides.com

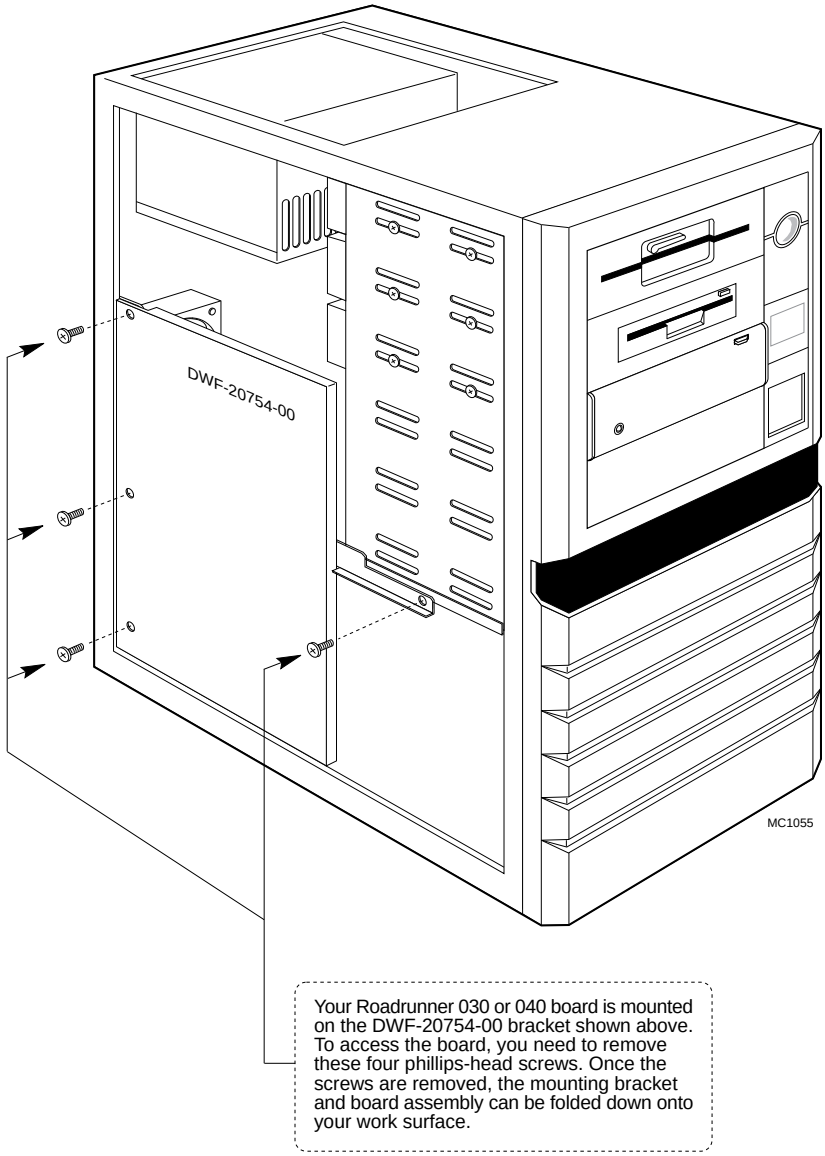

Roadrunner Mounting Bracket

All manuals and user guides at all-guides.com

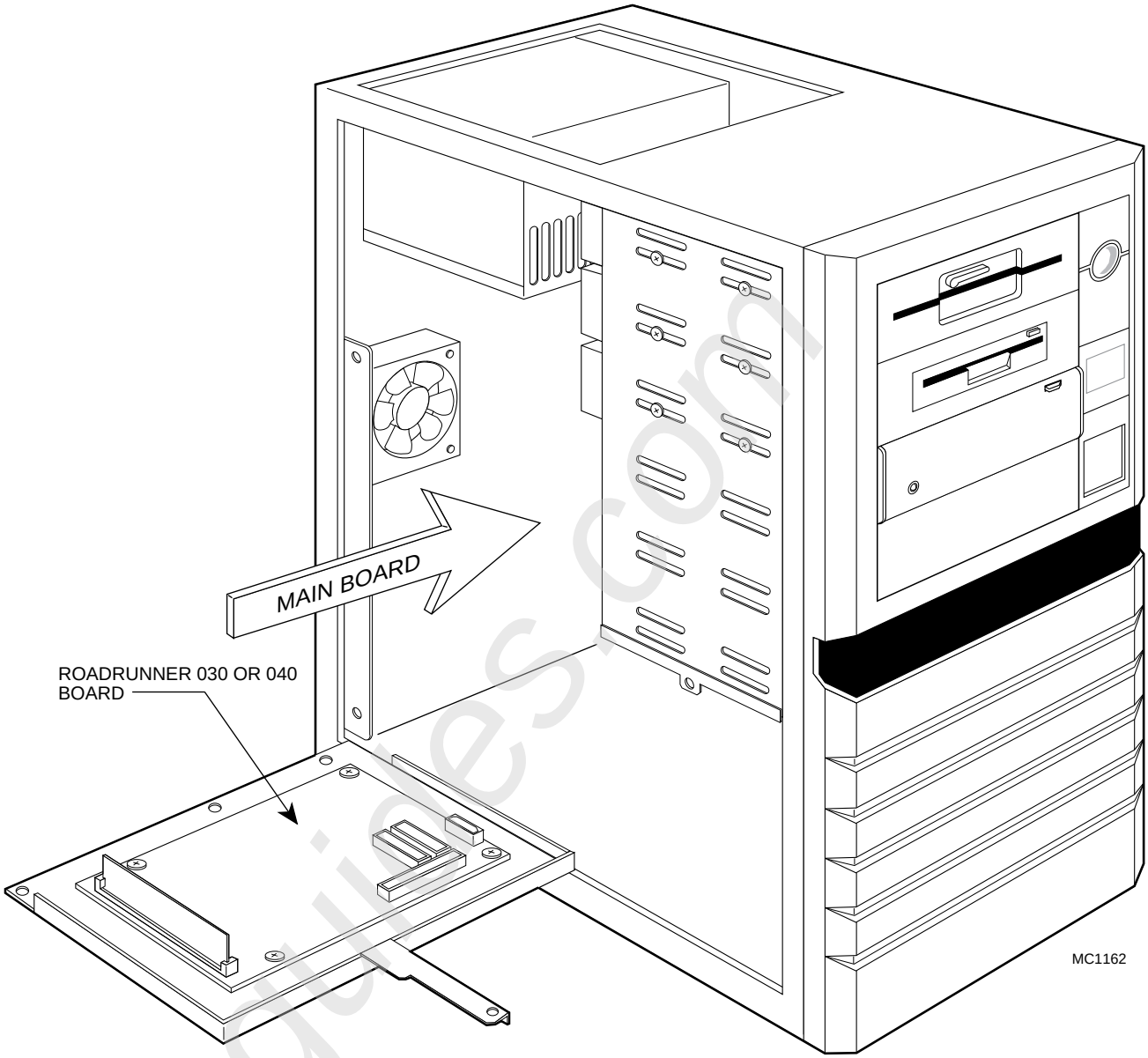

With the Roadrunner and its mounting bracket folded down out of the way, you will be able to access the main electronics board.

Locating the Main Electronics Board

All manuals and user guides at all-guides.com

6.1 Eagle 300 AM-319(-00) I/O Expansion Slots

The AM-319 board illustration shows the four serial I/O expansion slots: J8, J9, J10, and J11. As indicated in the illustration, the first I/O board installs in J8, the second in J9, the third in J10, and the fourth in J11.

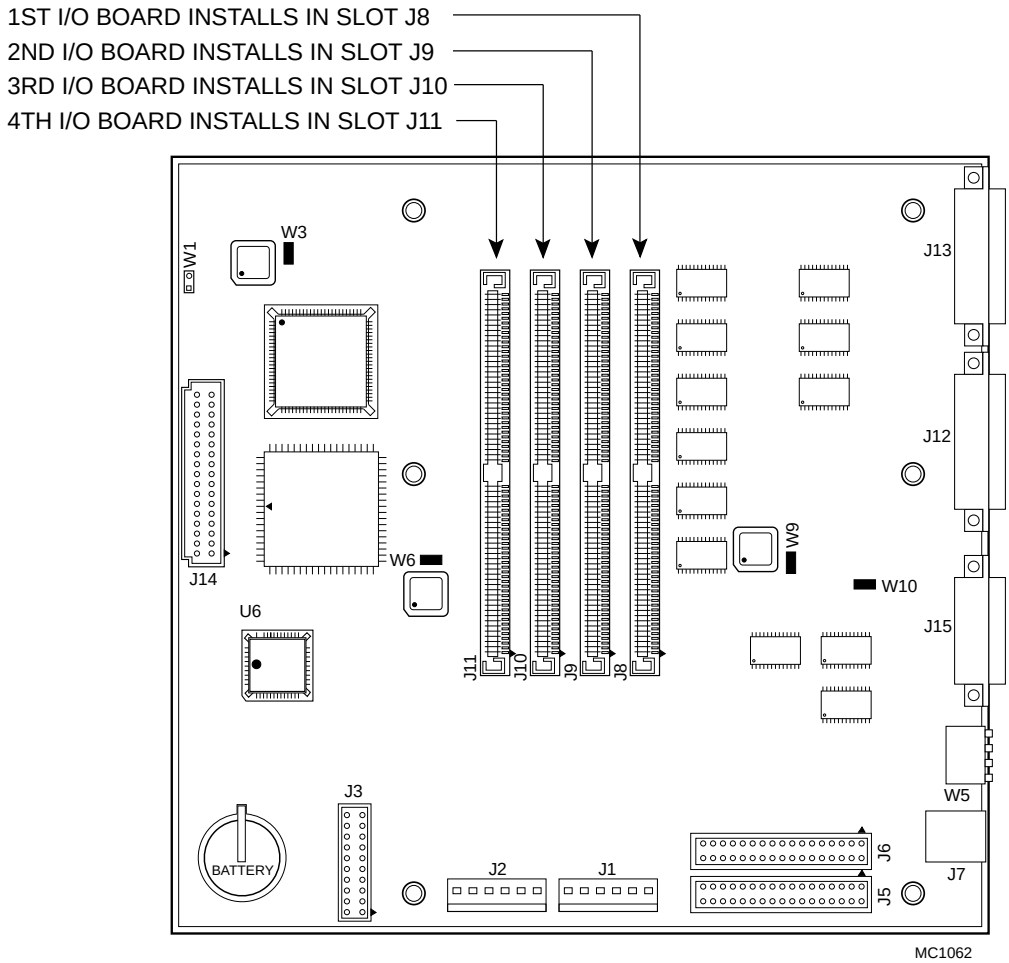

AM-319 I/O Expansion Slots

All manuals and user guides at all-guides.com

6.2 Eagle 200 AM-319(-10) I/O Expansion Slots

The AM-319(-10) board illustration shows the two serial I/O expansion slots: J6 and J7. As indicated in the illustration, the first I/O board installs in J7 and the second in J6.

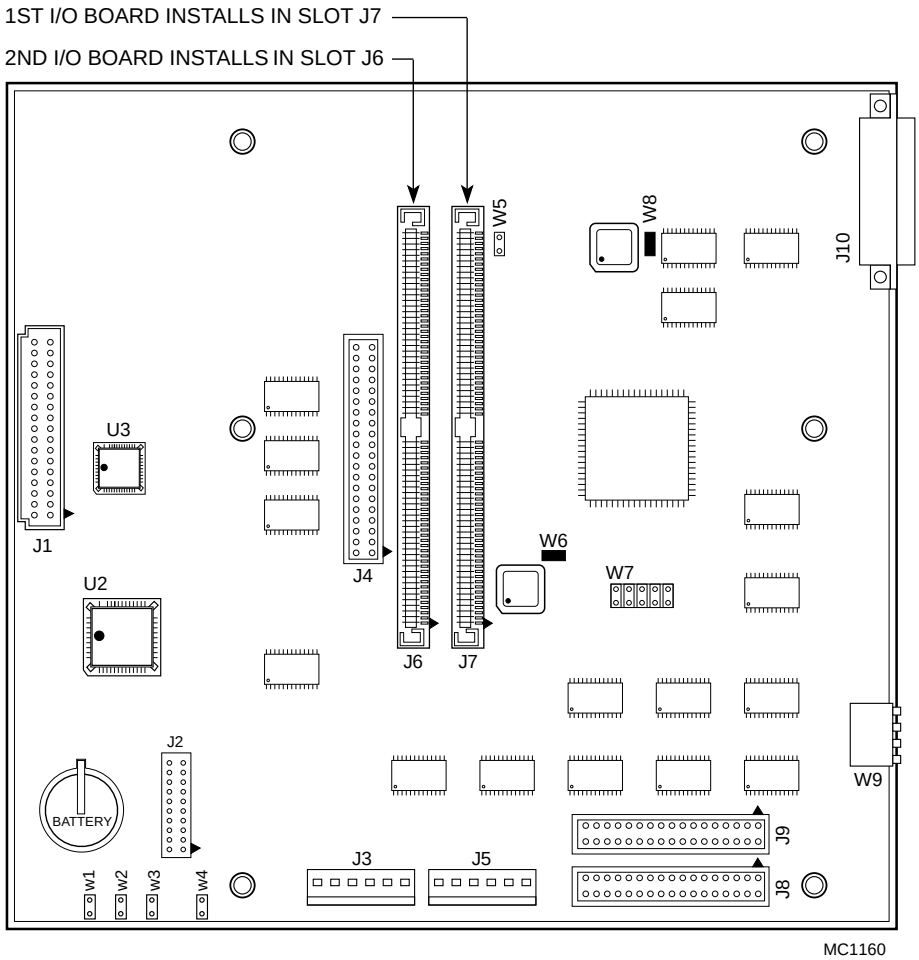

AM-319(-10) I/O Expansion Slots

All manuals and user guides at all-guides.com

6.3 Eagle 100 AM-137 I/O Expansion Slot

The AM-137 board illustration shows the one serial I/O expansion slot at location J6.

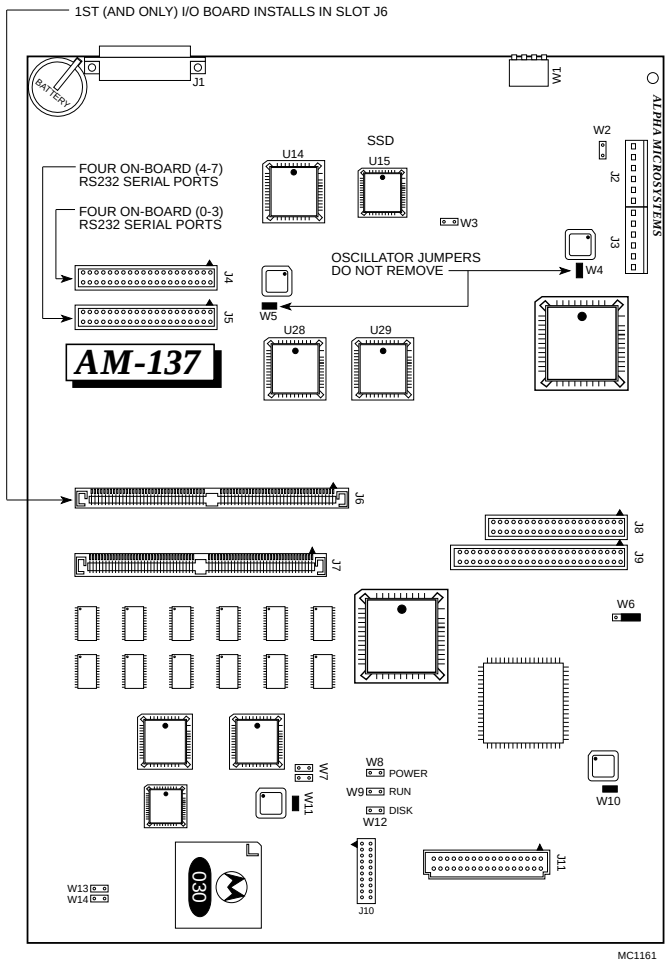

AM-137 I/O Expansion Slot

The AM-137 board has one I/O expansion slot that will support one AM-314 board. In addition, the AM-137 board has eight standard RS232 on-board serial ports, which are attached to the rear panel using exactly the same type of cable assembly used by AM-314 boards.

The Eagle 100's eight on-board serial ports can take advantage of a feature called Super I/O. Super I/O handles character output in a much more efficient manner than any other previously released AMOS serial port driver. This greatly reduces the load on the CPU and makes more CPU cycles available for other tasks. More information about Super I/O is located in your *Eagle Series Computer Owner's Manual* and in the *AM-318 Eight-Port Serial I/O Installation Instructions*.

All manuals and user guides at all-guides.com

6.4 Installing the AM-314 Board

The Eagle's I/O expansion slots are very similiar to the type of slots memory SIMM modules plug into. The AM-314 board should be inserted into the appropriate slot with the component side of the AM-314 board facing your computer's rear panel. The AM-314 must be inserted into the expansion slot at a slight angle and after you feel the board settle into the slot, you rotate it into an upright position. When the AM-314 is properly positioned, the metal retainer clips at each end of the expansion slot will click into position, locking the board in place.

Very little force is required to install an AM-314 board. If you're having problems installing the board in the expansion slot, stop and take a moment to examine both the AM-314 and the slot. Make sure you are installing the AM-314 with the component side of the board facing your computer's rear panel.

6.5 Eagle 300 Rear Panel I/O Configuration

The next step in the installation process is to install the I/O cables that link your AM-314 boards to the rear panel of your computer.

The next illustration shows how rear panel serial I/O connector positions correspond to where a particular I/O board is plugged into the AM-319 board (i.e., J8, J9, J10, and J11):

If you are mixing AM-314 and AM-318 serial I/O boards in your Eagle computer, please see the *AM-318 Eight-Port Serial I/O Board Installation Instructions* for more information on installing I/O cables.

All manuals and user guides at all-guides.com

AM-314 (installed in slot J8 on the AM-319)

The cable that extends between the AM-314 board and the rear panel will be installed as follows:

- The connector marked P0 will be attached to the rear panel as position H1.
- The connector marked P1 will be attached to the rear panel at position G1.
- The connector marked P2 will be attached to the rear panel at position F1.
- The connector marked P3 will be attached to the rear panel at position E1.

AM-314 (installed in slot J9 on the AM-319)

The cable that extends between the AM-314 board and the rear panel will be installed as follows:

- The connector marked P0 will be attached to the rear panel as position H2.
- The connector marked P1 will be attached to the rear panel at position G2.
- The connector marked P2 will be attached to the rear panel at position F2.
- The connector marked P3 will be attached to the rear panel at position E2.

AM-314 (installed in slot J10 on the AM-319)

The cable that extends between the AM-314 board and the rear panel will be installed as follows:

- The connector marked P0 will be attached to the rear panel as position D1.
- The connector marked P1 will be attached to the rear panel at position D2.
- The connector marked P2 will be attached to the rear panel at position C1.
- The connector marked P3 will be attached to the rear panel at position C2.

AM-314 (installed in slot J11 on the AM-319)

The cable that extends between the AM-314 board and the rear panel will be installed as follows:

- The connector marked P0 will be attached to the rear panel as position B1.
- The connector marked P1 will be attached to the rear panel at position B2.
- The connector marked P2 will be attached to the rear panel at position A1.
- The connector marked P3 will be attached to the rear panel at position A2.

MC1063

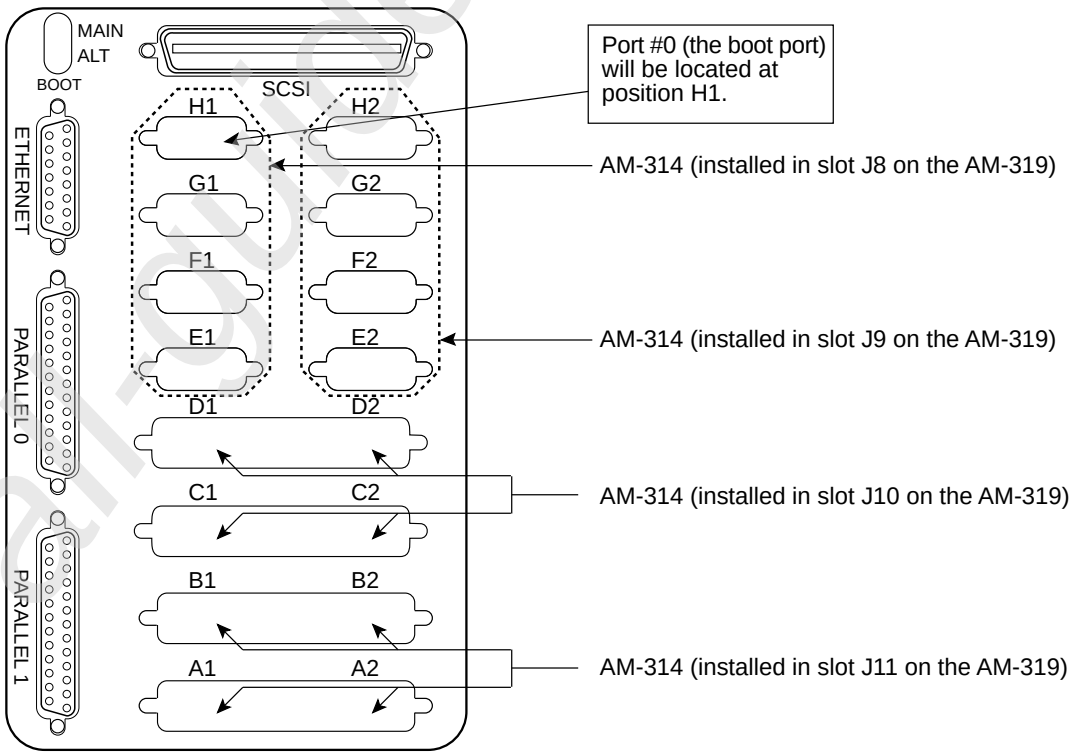

AM-314 Rear Panel Connector Locations

All manuals and user guides at all-guides.com

6.6 Eagle 200 Rear Panel I/O Configuration

The next step in the installation process is to install the I/O cables that link your AM-314 boards to the rear panel of your computer.

The next illustration shows how rear panel serial I/O connector positions correspond to where a particular I/O board is plugged into the AM-319(-10) board (i.e., J6 and J7).

The illustration on the next page shows the method used to install AM-314 DB9 connectors on the rear panel:

All manuals and user guides at all-guides.com

AM-314 (installed in slot J7 on the AM-319-10)

The cable that extends between the AM-314 board and the rear panel will be installed as follows:

- The connector marked P0 will be attached to the rear panel as position F1.
- The connector marked P1 will be attached to the rear panel at position F2.
- The connector marked P2 will be attached to the rear panel at position E1.
- The connector marked P3 will be attached to the rear panel at position E2.

AM-314 (installed in slot J6 on the AM-319-10)

The cable that extends between the AM-314 board and the rear panel will be installed as follows:

- The connector marked P0 will be attached to the rear panel as position D1.
- The connector marked P1 will be attached to the rear panel at position D2.
- The connector marked P2 will be attached to the rear panel at position C1.
- The connector marked P3 will be attached to the rear panel at positionC2.

MC1163

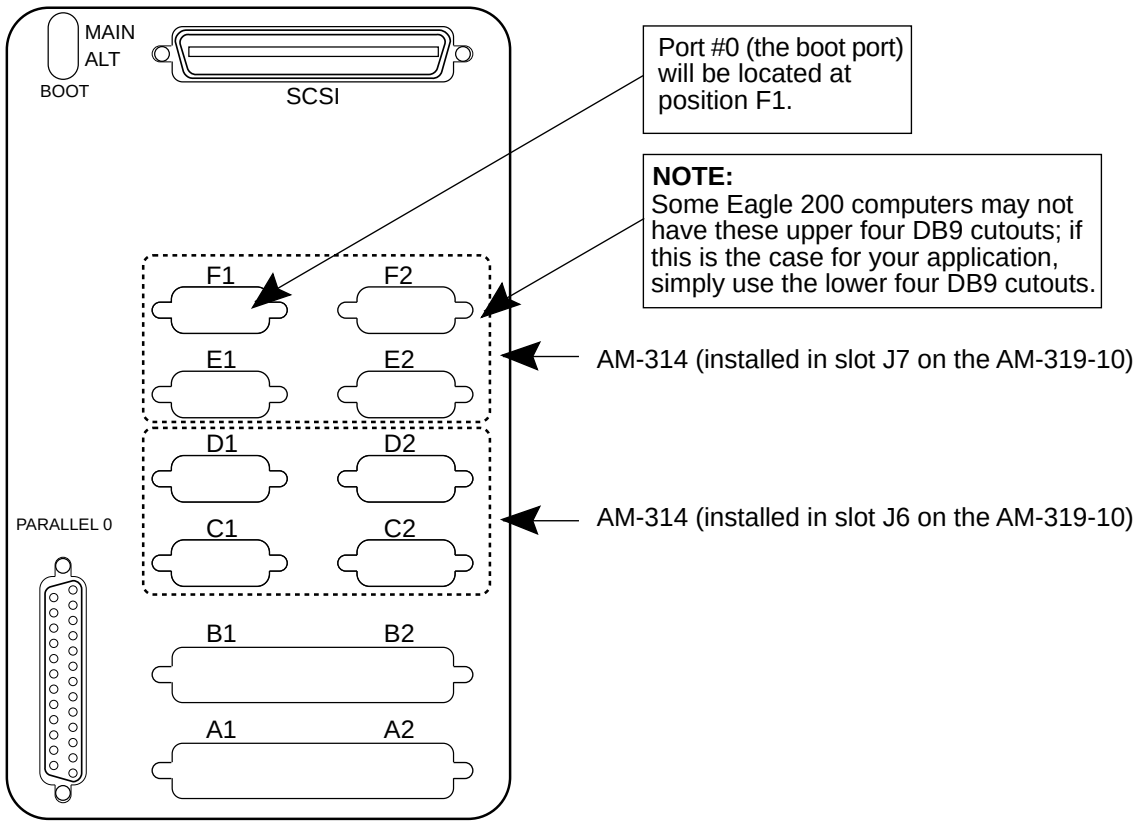

AM-314 Rear Panel Connector Locations

All manuals and user guides at all-guides.com

6.7 Eagle 100 Rear Panel I/O Configuration

The Eagle 100's AM-137 board only has one I/O expansion slot, but it also has eight on-board RS232 serial ports, which attach to the rear panel via standard DB9 connectors.

The following illustration shows mounting locations for the eight on-board DB9 serial ports, plus the location of the four AM-314 DB9 serial ports:

All manuals and user guides at all-guides.com

ON BOARD SERIAL PORTS 0 THROUGH 3

The cable that extends between the AM-314 board and the rear panel will be installed as follows:

- The connector marked P0 will be attached to the rear panel as position F1.
- The connector marked P1 will be attached to the rear panel at position F2.
- The connector marked P2 will be attached to the rear panel at position E1.
- The connector marked P3 will be attached to the rear panel at position E2.

ON BOARD SERIAL PORTS 4 THROUGH 7

The cable that extends between the AM-314 board and the rear panel will be installed as follows:

- The connector marked P0 will be attached to the rear panel as position D1.
- The connector marked P1 will be attached to the rear panel at position D2.
- The connector marked P2 will be attached to the rear panel at position C1.
- The connector marked P3 will be attached to the rear panel at positionC2.

MC1163

AM-314 (installed in slot J6 on the AM-137

The cable that extends between the AM-314 board and the rear panel will be installed as follows:

- The connector marked P0 will be attached to the rear panel as position B1.
- The connector marked P1 will be attached to the rear panel at positionB2.
- The connector marked P2 will be attached to the rear panel at positionA1.
- The connector marked P3 will be attached to the rear panel at positionA2.

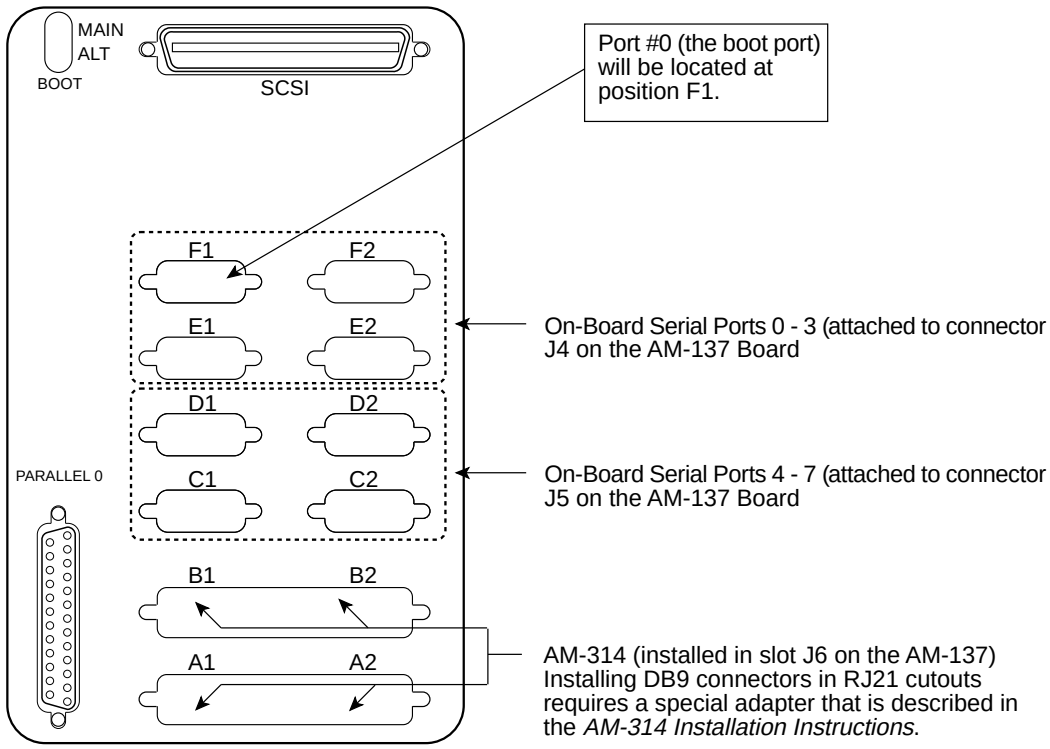

On-Board Serial Ports and AM-314 Rear Panel Connector I/O Locations

All manuals and user guides at all-guides.com

6.8 Installing AM-314 DB9 Connectors on the Rear Panel

1. Plug one 40-pin I/O cable into each of the AM-314 boards. The 40-pin connector on the AM-314 board has an embossed arrow showing the pin-1 location. Make sure the red stripe on the I/O cable aligns with the embossed arrow on the connector.

2. On the inside of your Eagle chassis, install the AM-314 DB9 connectors as shown in the previous illustration. AM-314 DB9 connectors are attached to the rear panel with two 3/16" hex-nut screws. These screws are included in your installation kit.

3. The diagram of the Eagle's rear panel I/O configuration shows eight DB9 cutouts and four RJ21 cutouts. If you are installing more than two AM-314 boards, you will need to use two or more of the RJ21 cutouts for installing DB9 connectors. There are four special adapter brackets provided with your Eagle computer that will allow you to install two DB9 connectors into one RJ21 cutout. The adapter bracket and serial port assembly are shown below:

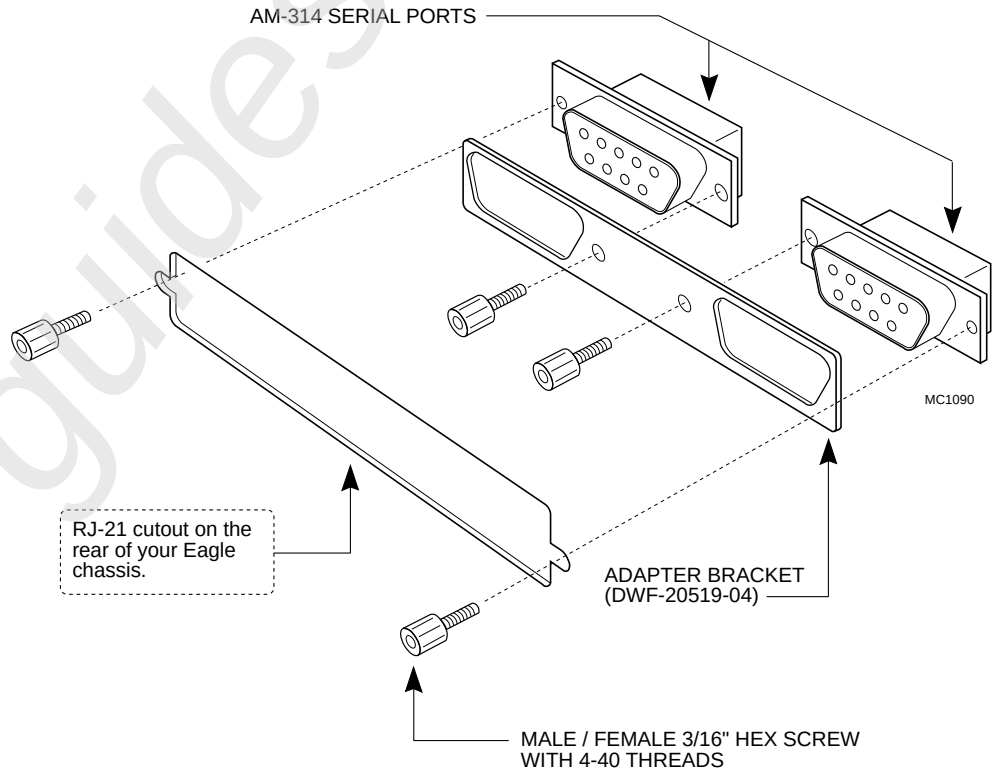

RJ21 to DB9 Conversion Assembly

All manuals and user guides at all-guides.com

6.9 System Initialization Command File (Eagle 300 and 200)

In order to use a serial port, it needs to be defined in your system initialization command file. This file, which is located in the SYS: account, is called AMOS32.INI. Within this file, serial ports are defined using an octal (base 8) numbering system. The octal number used corresponds directly to what slot on the AM-319 a particular I/O board is plugged into. The following table shows the AM-314 octal port numbers for each of the four I/O expansion slots on the AM-319 board:

AM-319 OCTAL PORT NUMBERING

AM-319 I/O EXPANSION SLOT	OCTAL PORT NUMBERING FOR AM-314 BOARDS
J8	0 -3
J9	10 - 13
J10	20 - 23
J11	30 - 33

AM-319(-10) OCTAL PORT NUMBERING

AM-319(-10) I/O EXPANSION SLOT	OCTAL PORT NUMBERING FOR AM-314 BOARDS
J7	0 -3
J6	10 - 13

AM-314 Octal Port Numbering for Eagle 300 and 200 Computers

To illustrate how serial ports are defined in the AMOS32.INI file, we'll construct a sample system initialization command file based on the installation of four AM-314 boards into an Eagle 300 computer.

It's never a good idea to directly modify your AMOS32.INI file; always create a test file; type:

```
LOG SYS: RETURN
COPY TEST.INI=AMOS32.INI RETURN
```

Several areas in the TEST.INI file need to be modified:

1. You need to make sure the total number of jobs assigned to the JOBS statement is increased by the number of new serial ports being added to the computer. The example configuration has four AM-314 boards, which is a total of 16 serial ports. For our example configuration, we will set the JOBS statement to 22, which will allow for all the serial ports, the Eagle's two on-board parallel ports, and a couple of extras to support spawned jobs.

All manuals and user guides at all-guides.com

2. You must also add some additional JOBALC statements. JOBALC allocates a name to each defined job. In our TEST.INI file, we'll use names like JOB1, JOB2, etc. However, you could just as easily use TOM, DICK, HARRY, etc.

3. Roadrunner enhanced computers, like your Eagle, require a healthy quantity of queue blocks. When you add new serial ports, you have to increase your queue block allocation. Use the following queue block formula to determine how many queue blocks you require.

```
NEW QUEUE BLOCK REQUIREMENT = OLD QUEUE BLOCKS + (13 x THE NUMBER OF JOBS)
```

For example, if the QUEUE statement in your system initialization command file is currently set to 200 and the JOBS statement is set to 22, the resulting formula would look like this:

```
NEW QUEUE BLOCK REQUIREMENT = 200 + (13 x 22)
```

For our example, the QUEUE statement should be changed to 486 to accommodate our new queue block requirements.

4. You will also need to add a TRMDEF statement to your system initialization command file for each new port. The TRMDEF statement is where the octal port number is assigned. The basic elements that make up a TRMDEF statement are shown below:

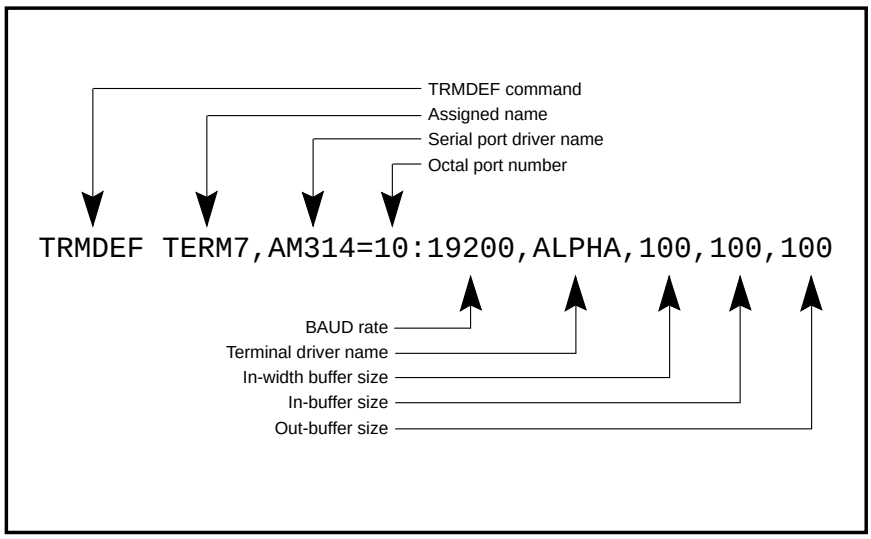

MC1092

TRMDEF Command Statement

5. Finally, you will add SETJOB statements that attach the JOBALC name to the TRMDEF name, assign memory to the job, and log the job on.

An Example of our TEST.INI file with all the support statements for the four AM-314 boards is shown on the next page.

All manuals and user guides at all-guides.com


```
:T
JOBS 22
JOBALC JOB1,JOB2,JOB3,JOB4,JOB5,JOB6,JOB7,JOB8,JOB9,JOB10
JOBALC JOB11,JOB12,JOB13,JOB14,JOB15,JOB16
;
QUEUE 486
;
TRMDEF TERM1,AM314=0:19200,ALPHA,100,100,100
TRMDEF TERM2,AM314=1:19200,ALPHA,100,100,100
TRMDEF TERM3,AM314=2:19200,ALPHA,100,100,100
TRMDEF TERM4,AM314=3:19200,ALPHA,100,100,100
TRMDEF TERM5,AM314=10:19200,ALPHA,100,100,100
TRMDEF TERM6,AM314=11:19200,ALPHA,100,100,100
TRMDEF TERM7,AM314=12:19200,ALPHA,100,100,100
TRMDEF TERM8,AM314=13:19200,ALPHA,100,100,100
TRMDEF TERM9,AM314=20:19200,ALPHA,100,100,100
TRMDEF TERM10,AM314=21:19200,ALPHA,100,100,100
TRMDEF TERM11,AM314=22:19200,ALPHA,100,100,100
TRMDEF TERM12,AM314=23:19200,ALPHA,100,100,100
TRMDEF TERM13,AM314=30:19200,ALPHA,100,100,100
TRMDEF TERM14,AM314=31:19200,ALPHA,100,100,100
TRMDEF TERM15,AM314=32:19200,ALPHA,100,100,100
TRMDEF TERM16,AM314=33:19200,ALPHA,100,100,100
;
DEVTBL DSK1,DSK2
DEVTBL TRM,RES,MEM
DEVTBL /EPP0,/EPP1
;
BITMAP DSK
SYSTEM TRM.DVR
SYSTEM EPP.DVR[1,6]
SYSTEM
;
SETJOB JOB2,TERM2,500K,LOGIN
SETJOB JOB3,TERM3,500K,LOGIN
SETJOB JOB4,TERM4,500K,LOGIN
SETJOB JOB5,TERM5,500K,LOGIN
SETJOB JOB6,TERM6,500K,LOGIN
SETJOB JOB7,TERM7,500K,LOGIN
SETJOB JOB8,TERM8,500K,LOGIN
SETJOB JOB9,TERM9,500K,LOGIN
SETJOB JOB10,TERM10,500K,LOGIN
SETJOB JOB11,TERM11,500K,LOGIN
SETJOB JOB12,TERM12,500K,LOGIN
SETJOB JOB13,TERM13,500K,LOGIN
SETJOB JOB14,TERM14,500K,LOGIN
SETJOB JOB15,TERM15,500K,LOGIN
SETJOB JOB16,TERM16,500K,LOGIN
;
MOUNT DSK1:
MOUNT DSK2:
;
MEMORY 0
```

Update JOBS and JOBALC statements

QUEUE block allocation increased

TRMDEF statements for 1st AM-314

TRMDEF statements for 2nd AM-314

TRMDEF statements for 3rd AM-314

TRMDEF statements for 4th AM-314

SETJOB statements for all serial ports

Sample TEST.INI File

When installing an AM-314 serial I/O board into an AM-319 board, make sure you use **AM314** as the serial port driver in your TRMDEF statements.

All manuals and user guides at all-guides.com

6.10 System Initialization Command File (Eagle 100)

Unlike the Eagle 200 and 300 computers, all Eagle 100 computers come standard with eight RS232 serial ports, which are accessed on the computer's rear panel via DB9 connectors. These eight serial ports are built into the Eagle 100's main logic board, the AM-137. In addition to the eight on-board serial ports, the AM-137 board also has one I/O expansion slot where you can install one AM-314 serial I/O board.

In order to use a serial port, it needs to be defined in your system initialization command file. This file, which is located in the SYS: account, is called AMOS32.INI. Within this file, serial ports are defined using an octal (base 8) numbering system. The following table shows the 314 octal port numbers for the single I/O expansion slot (J6) on the AM-137, as well as the octal port numbers for the AM-137's eight on board serial ports:

AM-137 ON-BOARD SERIAL PORTS

AM-137 BOARD'S EIGHT ON-BOARD I/O PORTS	OCTAL PORT NUMBERING
FOUR SERIAL PORTS CONNECTED TO J4	0-3
FOUR SERIAL PORTS CONNECTED TO J5	4-7
NOTE: The eight on-board serial ports use octal port numbers 0-7 and a driver called AM318.IDV, which is the same driver used by the eight port AM-318 I/O board.	

AM-137 J6 I/O EXPANSION SLOT

AM-137 I/O EXPANSION SLOT	OCTAL PORT NUMBERING FOR AM-314 BOARDS
J6	10-13

MC1172

Eagle 100 Octal Port Numbering Scheme

To illustrate how serial ports are defined in the AMOS32.INI file, we'll construct a sample initialization command file based on the installation of one AM-314 I/O board. It's never a good idea to directly modify your AMOS32.INI file; always create a test file; type:

```
LOG SYS: RETURN
COPY TEST.INI=AMOS32.INI RETURN
```

Several areas in the TEST.INI file need to be modified:

1. You need to make sure the total number of jobs assigned to the JOBS statement is increased by the number of new serial ports being added to the computer. The example configuration has one AM-314 board, plus the eight on-board serial ports, which is total of

All manuals and user guides at all-guides.com

12 serial ports. For our example configuration, we will set the JOBS statement to 30, which will allow for all the serial ports, the Eagle's two on-board parallel ports, and some extras to support spawned jobs.

2. You must also add some additional JOBALC statements. JOBALC allocates a name to each defined job. In our TEST.INI file, we'll use names like JOB1, JOB2, etc. However, you could just as easily use TOM, DICK, HARRY, etc.

3. Roadrunner based computers, like your Eagle, require a healthy quantity of queue blocks. When you add new serial ports, you have to increase your queue block allocation. Use the following queue block formula to determine how many queue blocks you require.

```
NEW QUEUE BLOCK REQUIREMENT = OLD QUEUE BLOCKS + (13 x THE NUMBER OF JOBS)
```

For example, if the QUEUE statement in your system initialization command file is currently set to 200 and the JOBS statement is set to 30, the resulting formula would look like this:

```
NEW QUEUE BLOCK REQUIREMENT = 200 + (13 x 30)
```

For our example, the QUEUE statement should be changed to 590 to accommodate our new queue block requirements.

4. You will also need to add a TRMDEF statement to your system initialization command file for each new port. The TRMDEF statement is where the octal port number is assigned. The basic elements that make up a TRMDEF statement are shown below:

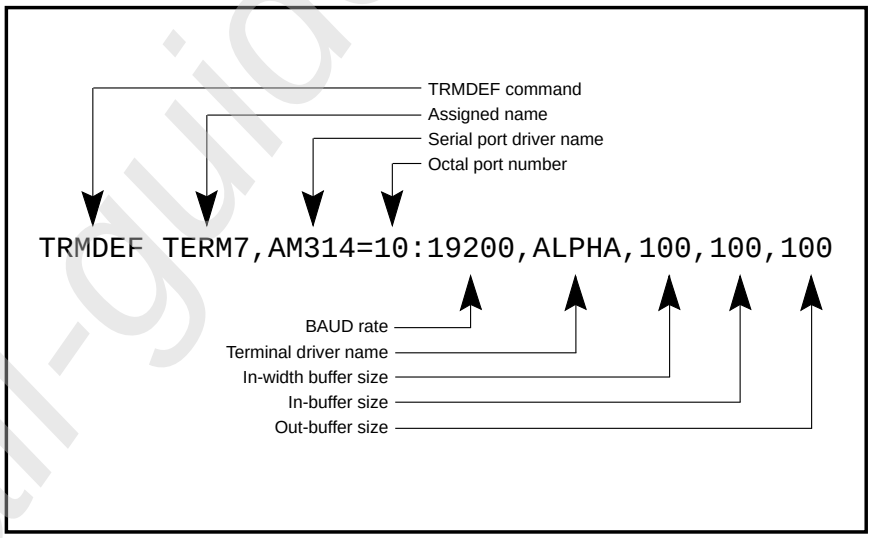

TRMDEF Command Statement

5. Finally, you will add SETJOB statements that attach the JOBALC name to the TRMDEF name, assign memory to the job, and log the job on.

All manuals and user guides at all-guides.com

An Example of our TEST.INI file with all the support statements for the on-board serial ports and the AM-314 board is shown below:

```
:T
JOBS 30
JOBALC JOB1,JOB2,JOB3,JOB4,JOB5,JOB6,JOB7,JOB8,JOB9,JOB10
JOBALC JOB11,JOB12,JOB13,JOB14,JOB15,JOB16,JOB17,JOB18
;
;
QUEUE 590
;
TRMDEF TERM1,AM318=0:19200,ALPHA,100,100,100
TRMDEF TERM2,AM318=1:19200,ALPHA,100,100,100
TRMDEF TERM3,AM318=2:19200,ALPHA,100,100,100
TRMDEF TERM4,AM318=3:19200,ALPHA,100,100,100
TRMDEF TERM5,AM318=4:19200,ALPHA,100,100,100
TRMDEF TERM6,AM318=5:19200,ALPHA,100,100,100
TRMDEF TERM7,AM318=6:19200,ALPHA,100,100,100
TRMDEF TERM8,AM318=7:19200,ALPHA,100,100,100
TRMDEF TERM9,AM314=10:19200,ALPHA,100,100,100
TRMDEF TERM10,AM314=11:19200,ALPHA,100,100,100
TRMDEF TERM11,AM314=12:19200,ALPHA,100,100,100
TRMDEF TERM12,AM314=13:19200,ALPHA,100,100,100
;
DEVTBL DSK1,DSK2
DEVTBL TRM,RES,MEM
DEVTBL /EGP0
;
BITMAP DSK
SYSTEM TRM.DVR
SYSTEM EGP.DVR[1,6]
SYSTEM
;
SETJOB JOB2,TERM2,500K,LOGIN
SETJOB JOB3,TERM3,500K,LOGIN
SETJOB JOB4,TERM4,500K,LOGIN
SETJOB JOB5,TERM5,500K,LOGIN
SETJOB JOB6,TERM6,500K,LOGIN
SETJOB JOB7,TERM7,500K,LOGIN
SETJOB JOB8,TERM8,500K,LOGIN
SETJOB JOB9,TERM9,500K,LOGIN
SETJOB JOB10,TERM10,500K,LOGIN
SETJOB JOB11,TERM11,500K,LOGIN
SETJOB JOB12,TERM12,500K,LOGIN
;
MOUNT DSK1:
MOUNT DSK2:
;
MEMORY 0
```

Update JOBS and JOBALC statements

QUEUE block allocation increased

TRMDEF statements for the four AM-137 on-board serial ports connected to J4

TRMDEF statements for the four AM-137 on-board serial ports connected to J5

TRMDEF statements for the AM-314

SETJOB statements for all serial ports

Sample TEST.INI File

All manuals and user guides at all-guides.com

6.11 Finishing the Installation

Once you have created a TEST.INI file that is applicable to your configuration, you need to verify it has been correctly modified. You do this by using the MONTST command:

```
LOG OPR: RETURN
MONTST AMOS32,TEST.INI RETURN
```

Watch closely as the system initialization command file is executed; make sure no errors are displayed on your terminal screen. If an error does occur, take another look at your TEST.INI file; double check your octal port numbers and other statements you added to support the serial ports.

After you are certain your TEST.INI file is working correctly, execute the following command:

```
COPY AMOS32.INI = TEST.INI RETURN
```

7.0 DB-9 CONNECTOR SIGNALS FOR RS-232 AND RS-422

The following table shows the signal-to-pin orientation for each of the DB-9 connectors used in external serial I/O interfaces to the AM-314 board.

Table 1. Rear Panel DB-9 Connector Signals

PIN	Direction	RS-232 Signal Name	RS-422 Signal Name
1		N/C—no connection	N/C—no connection
2	Input	RXDx—Received Data	RXDx+—Received Data +
3	Output	TXDx—Transmitted Data	TXDx+—Transmitted Data +
4	Input	CTSx—Clear to Send	CTSx—Clear to Send
5	Output	RTSx—Request to Send	RTSx—Request to Send
6	Output	N/C—no connection	TXDx- —Transmitted Data -
7		GND—Signal Ground	GND—Signal Ground
8	Input	DCDx—Data Carrier Detect	RXDx- —Received Data -
9	Output	DTRx—Data Terminal Ready	DTRx—Data Terminal Ready

NOTE: x = channel number. For example: RXDx=RXD3 or Received Data, channel 3

Note: RS-232 or RS-422 interface is configurable independently for each connector.

All manuals and user guides at all-guides.com

8.0 TERMINAL CABLES

This section tells you which pins to connect to construct cables for particular terminals supported by Alpha Micro.

The AM-60, AM-62, and AM-70 terminals are all RS-232 devices and use the same cabling. The AM-62A, AM-65, AM-72, and AM-75 terminals when used as RS-232 devices, also use these pinouts.

Table 2 gives the pinouts required in cables connecting a terminal to the computer.

Table 2. Pinouts for RS-232 Terminal-to-Computer Cables

Terminal End DB-25 Connector			Computer End DB-9 Connector	
SIGNAL	PIN#	DIRECTION	PIN#	SIGNAL
TXD	2	----->	2	RXD
RXD	3	<-----	3	TXD
GND	7	<---->	7	GND
DTR	20	----->	4	CTS

The DTR connection (pin 20) to the computer (pin 4) can serve as 'READY/NOT BUSY' handshake line to prevent 'overrunning' the terminal with data. This protocol is also effective for several printers used by Alpha Micro.

Caution: While this cable configuration enhances the use of the Alpha Micro terminals, it may degrade system performance with other types of terminals and printers if they do not provide a compatible DTR on pin 20. In such cases, the connection to pin 4 at the computer end should be disconnected.

If it is necessary to operate the terminal with a cable over 50 feet in length (the specified maximum), or more than 20K baud, we recommend you use the RS-422 interface. The Alpha Micro RS-422 is a balanced voltage digital interface that eliminates noise problems and allows maximum performance for distances up to 1000 feet.

For a diagram of a typical cable configuration for RS-422, see the discussion of the AM-65 terminal below.

Note: An RS-422 peripheral device (terminal, printer, etc.) used with an Alpha Micro AM-1600M computer must also have an RS-422 interface capability, or an RS-232/RS-422 converter must be used with the terminal.

All manuals and user guides at all-guides.com

8.1 AM-65 Terminal and RS-422 Cabling

To use the AM-65 as an RS-422 device, you must use an RS-422 interconnecting cable and set the jumper block of the serial port to RS-422. Then, the AM-65 must be set to RS-422 in setup mode. See the AM-65 documentation that comes with the terminal. See Table 1 for the signal-to-pin orientation of the RS-422 interface. Table 3 lists the RS-422 pinouts for the AM-65 terminal.

Table 3. RS-422 Cabling for AM-65 Terminal

Terminal End DB-9 Connector			Computer End DB-9 Connector	
SIGNAL	PIN#	DIRECTION	PIN#	SIGNAL
TXD+	1	----->	8	RXD+
TXD-	7	----->	2	RXD-
RXD+	8	<-----	6	TXD+
RXD-	9	<-----	3	TXD-
GND	5	<---->	7	GND
DTR	4	----->	4	CTS

8.2 Workstation

RS-232 pin assignments for connecting an IBM PC-compatible Workstation to the Alpha Micro computer are listed below.

All manuals and user guides at all-guides.com

Table 4. Pinouts for Workstation-to-Computer Cable

IBM PC/AT and Compatibles

Workstation Serial I/O Port			Computer End DB-9 Connector	
SIGNAL	PIN#	DIRECTION	PIN#	SIGNAL
TXD	3	----->	2	RXD
RXD	2	<-----	3	TXD
GND	5	<---->	7	GND
RTS	7	----->	4	CTS
CTS	8	<-----	5	RTS
DSR	6	<--|		
DCD	1	<--|		

∞Pins 1, 6 and 8 on the workstation connector are jumpered.

Table 4. Workstation to Computer Pinouts, cont.

IBM PC/XT and Compatibles

Workstation Serial I/O Port			Computer End DB-9 Connector	
SIGNAL	PIN#	DIRECTION	PIN#	SIGNAL
TXD	2	----->	2	RXD
RXD	3	<-----	3	TXD
GND	7	<---->	7	GND
RTS	4	----->	4	CTS
CTS	5	<-----	5	RTS
DSR	6	<--|		
DCD	8	<--|		

∞Pins 5, 6 and 8 on the workstation connector are jumpered.

All manuals and user guides at all-guides.com

9.0 PRINTER CABLES

This section provides the specific cable requirements for the printers most frequently connected to the Alpha Micro computer system. You can purchase the appropriate cables from Alpha Micro, or construct them according to the following specifications.

AM-301, AM-304, and AM-306 Printers

The AM-301, AM-304 and AM-306 printers use the same RS-232 cabling. The pinouts are:

Table 5. Pinouts for RS-232 Printer-to-Computer Cable

Printer End DB-25 Connector			Computer End DB-9 Connector	
SIGNAL	PIN#	DIRECTION	PIN#	SIGNAL
TXD	2	----->	2	TXD
RXD	3	<-----	3	RXD
DTR	20	----->	4	CTS
GND	7	<---->	7	GND